# Postel 120x200cm
# LOVELY

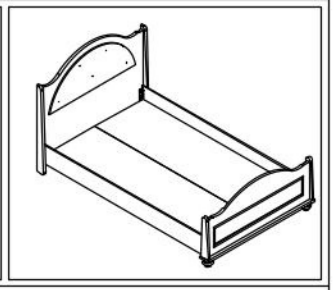

| ACCESSORIE NO : 001 | ACCESSORIE NO : 002 | ACCESSORIE NO : 004 | ACCESSORIE NO : 031 | ACCESSORIE NO : 092 |
|---|---|---|---|---|
| MİNİFİX MİL 6 MM | TİTUS MİNİFİX GÖVDE | ⌀8x30 KAVELA | KARYOLA MENTEŞE | 4*18 MM S. VİDASI |
| 15 ADET | 15 ADET | 10 ADET | 04 ADET | 16 ADET |

| ACCESSORIE NO : 114 | ACCESSORIE NO : 421 | ACCESSORIE NO : 420 | ACCESSORIE NO : 144 | ACCESSORIE NO : 109 |
|---|---|---|---|---|
| M6*15 YSB VİDA | MANNESMAN 1210 ÇİFT DELİKLİ | PLS.KARYOLA AYAK | M6 SOMUN | M6*45 VİDA |
| 28 ADET | 03 ADET | 06 ADET | 06 ADET | 06 ADET |

| ACCESSORIE NO : 189 | ACCESSORIE NO : 105 | ACCESSORIE NO : 107 | | |
|---|---|---|---|---|
| NOBLE AYAK | M6*30 YSB VİDA | M6*35 VİDA | | |
| 02 ADET | 04 ADET | 05 ADET | | |

| | | | | ACCESSORIE NO : 020 |
|---|---|---|---|---|
| | | | | MİNİFİX TAPA |
| | | | | 7 ADET |

PLEASE ORDER THE ACCESSORIES ACCORDING TO THE REFERENCE NUMBER ON THE DRAWING(EXAMPLE ACCESSORIE NO-008 RAFIX MIL 1.PCS.)

nábytek harmonia

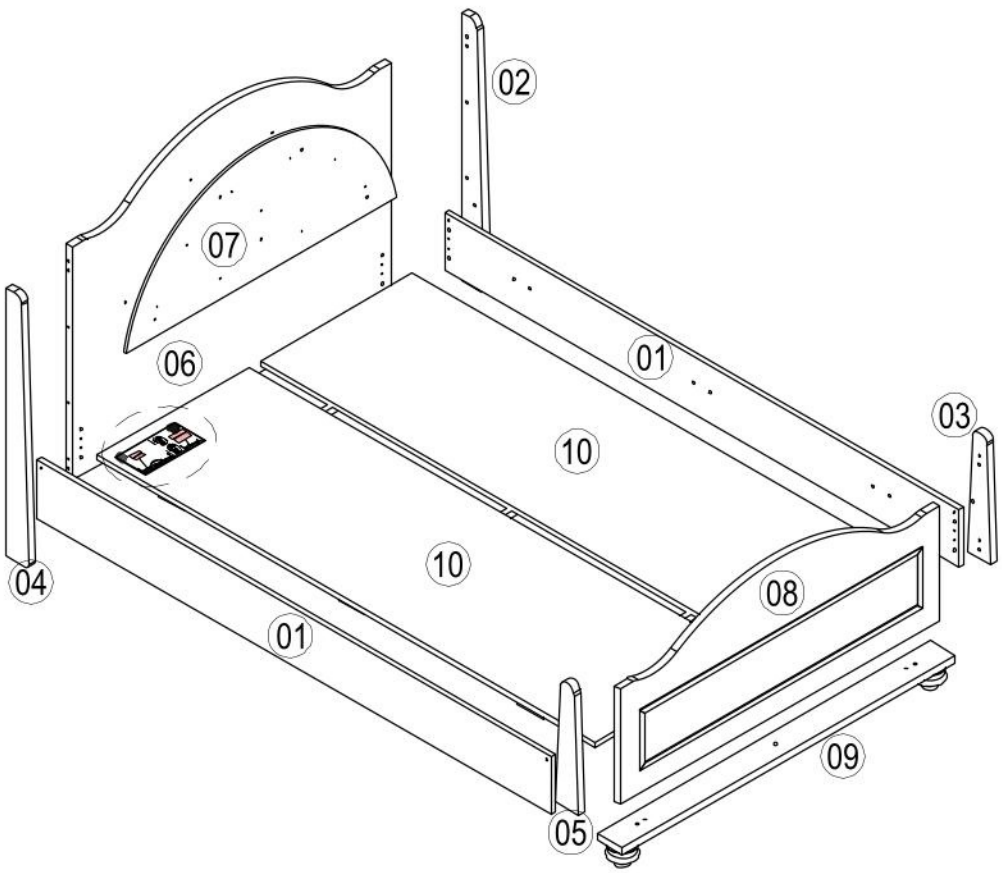


| NO | ADET/PCS | ÖLÇÜ/DIMENSIONS | NO | ADET/PCS | ÖLÇÜ/DIMENSIONS | NO | ADET/PCS | ÖLÇÜ/DIMENSIONS |
|---|---|---|---|---|---|---|---|---|
| 01 | 2 | 2014 X 196 | | | | | | |
| 02 | 1 | 912 X 90 | | | | | | |
| 03 | 1 | 429 X 92 | | | | | | |
| 04 | 1 | 912 X 90 | | | | | | |
| 05 | 1 | 429 X 92 | | | | | | |
| 06 | 1 | 1248 X 972 | | | | | | |
| 07 | 1 | 1061 X 439 | | | | | | |
| 08 | 1 | 1248 X 527 | | | | | | |
| 09 | 1 | 1304 X 98 | | | | | | |
| 10 | 2 | 1950 X 595 | | | | | | |

PLEASE ORDER THE SPARE PARTS ACCORDING TO THE REFERENCE NUMBER ON THE DRAWING

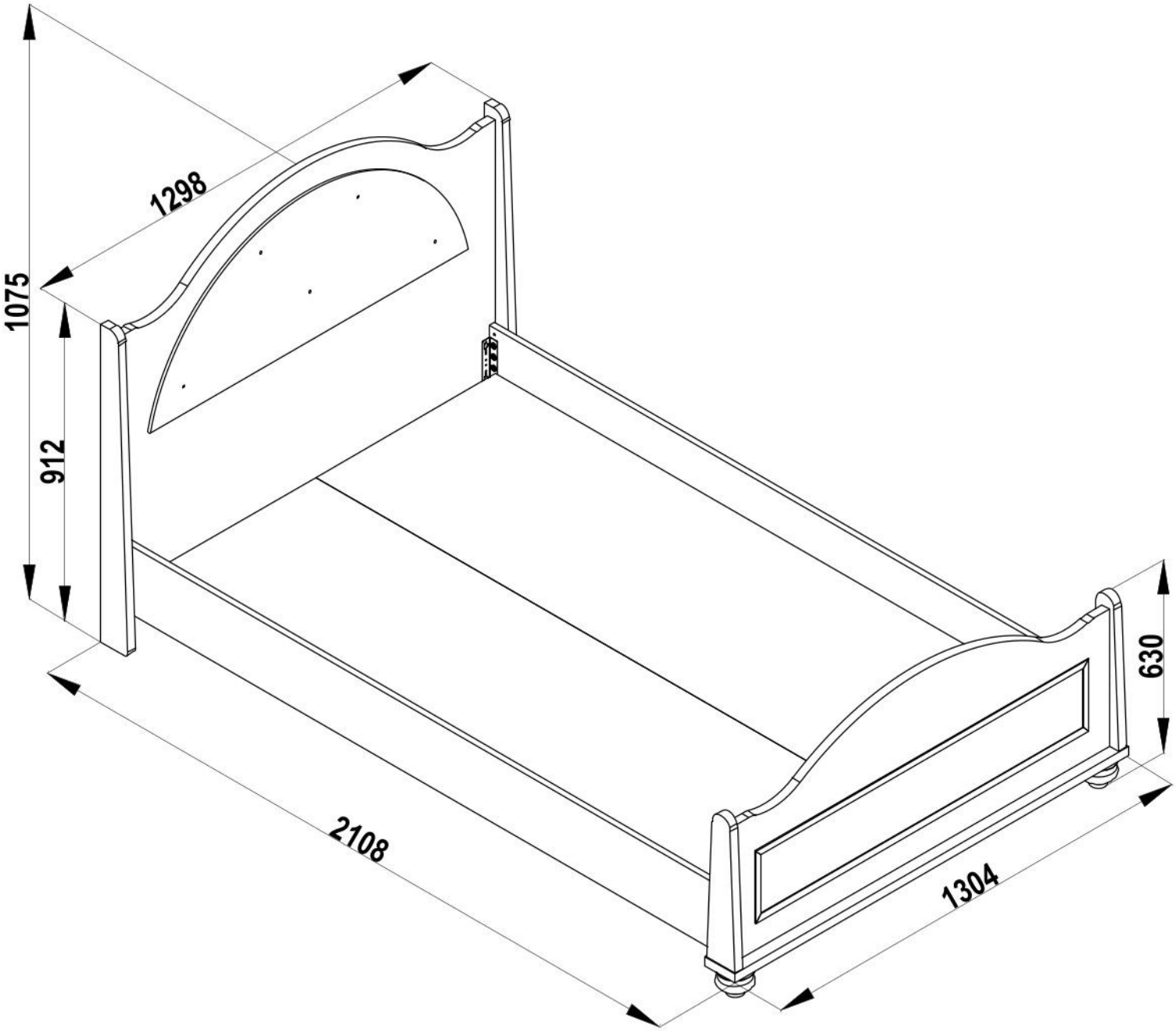
1298
1075
912
630
2108
1304

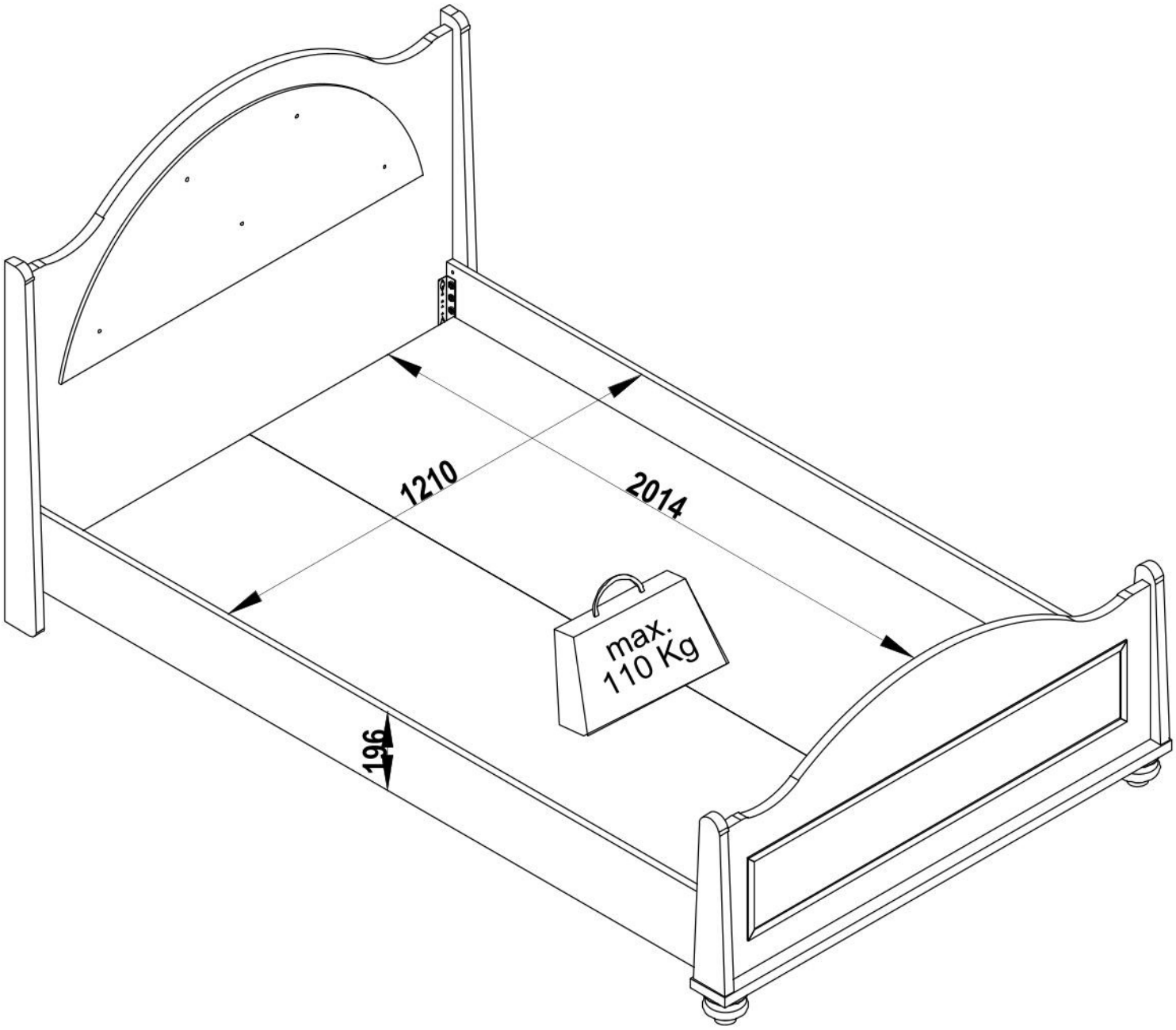
1210
2014
max.
110 Kg
196